EURECOM
Sophia Antipolis

OPEN AIR 5G INTERFACE
5G SOFTWARE ALLIANCE

OpenAirInterface 5G

Overview, Installation, Usage

Florian Kaltenberger

OpenAirInterface Workshop,
Beijing, 3.12.2019

Unleashing the potential of open-source in the 5G arena

Overview

- **Overview and Ecosystem**
- **The OpenAirInterface Software Alliance (OSA)**
- **OpenAirInterface Radio Access Network (RAN)**
  - Current and upcoming features
  - Hardware targets
  - Installation & Usage
  - Debugging tools

What is OpenAirInterface?

- **Open-source software-based implementation of 3GPP Technologies**
  - Starting at LTE (Rel 8), including features from LTE-Advanced (Rel 10/11/12), LTE-Advanced-Pro (Rel 13/14), going on to 5G Rel (15/16/…)
  - Spanning the full protocol stack of 3GPP standard
    - E-UTRAN (eNB, gNB, UE, nr-UE)
    - EPC (MME, S+P-GW, HSS)
  - Realtime RF and scalable emulation platforms
  - Works with many SDR platforms (ExpressMIMO2, USRP, LimeSDR, …)
- **Makes it is feasible to put a fully-compliant 4G eNodeB (and soon 5G gNB) and EPC in a commodity x86-based computer (or data center)**
- **Objectives**
  - Building a community of individual developers, academics and major industrials embracing open-source for 5G
  - Become a strong voice and maybe a game-changer in the 3GPP world
    - Real impact from “the little guys” on 3GPP systems

Collaborative Web Tools

- **Main page:**
  - https://www.openairinterface.org
- **Code available from**
  - RAN (eNB, UE, gNB, nr-UE) https://gitlab.eurecom.fr/oai/openairinterface5g
  - EPC (MME, HSS) https://github.com/OPENAIRINTERFACE/openair-cn
  - EPC (SPGW-C, SPGW-U) https://github.com/OPENAIRINTERFACE/openair-cn-cups
  - 5GC https://github.com/OPENAIRINTERFACE/openair5g-cn/
- **Mailing lists**
  - https://gitlab.eurecom.fr/oai/openairinterface5g/wikis/MailingList
- **Developer meetings (Eurecom & Webex)**
  - General: Tuesday Mornings 11:00 CET (Europe/Asia)
  - NR: Thursday, 16:00 CET (Europe/Americas)
- **Forum in Chinese**
  - http://bbs.opensource5g.org/forum.php
- **Other tools:**
  - https://openairinterface.slack.com
  - https://trello.com/oaidev

The OpenAirInterface Software Alliance (OSA)

- **Launched in 2014 as an endowment fund (French "Fonds de Dotation")**
- **Current strategic members**

orange™ FUJITSU NOKIA Bell Labs Qualcomm INTERDIGITAL TCL 创意感动生活 The Creative Life Platforms for Advanced Wireless Research

- **Many associate members**
- **Goals:**
  - Promote OpenAirInterface and its open-source licensing model
  - Support the community of developers and users
  - Accept donations to maintain engineering support team

OSA People

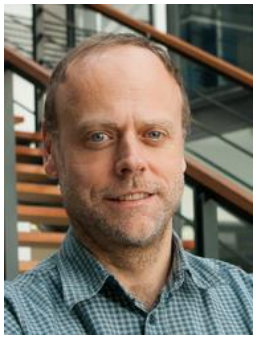

- **President:**
  - Raymond Knopp (Eurecom)
- **General Secretary:**
  - Florian Kaltenberger (Eurecom)
- **Treasury:**
  - Pascal Gros (Eurecom)
- **Administrators:**
  - David Gesbert, Ulrich Finger, Navid Nikaein (Eurecom)
  - Pierre Bonnard (TCL), Yuko Akiyama (Fujitsu), Abhimanyu Gosain (PAWR), Christian Gallard (Orange), Laurent Despersin (Interdigital), Laurent Roullet (Nokia Bell Labs)
- **Staff**
  - Irfan Ghauri (Director)
  - Raphael Defosseux (CI Architect)

OSA Boards

- **Strategic Board**
  - OSA strategic members
  - Webex meeting every 2 weeks
  - Overview of recent activity
  - Discussion on
    - strategic objectives
    - Legal matters
    - Links with other organizations (e.g. standardization)
- **Technical Board**
  - Members: OSA, Orange, Nokia, Fujitsu, TCL, EURECOM, BCOM, Fraunhofer IIS, OpenCells
  - Webex meeting every 2 weeks
  - Roadmap implementation
  - Architecture evolution
  - Documentation & Coding guidelines
  - Review merge requests
    - Code quality
    - Adherence to architecture

The OAI Licensing model

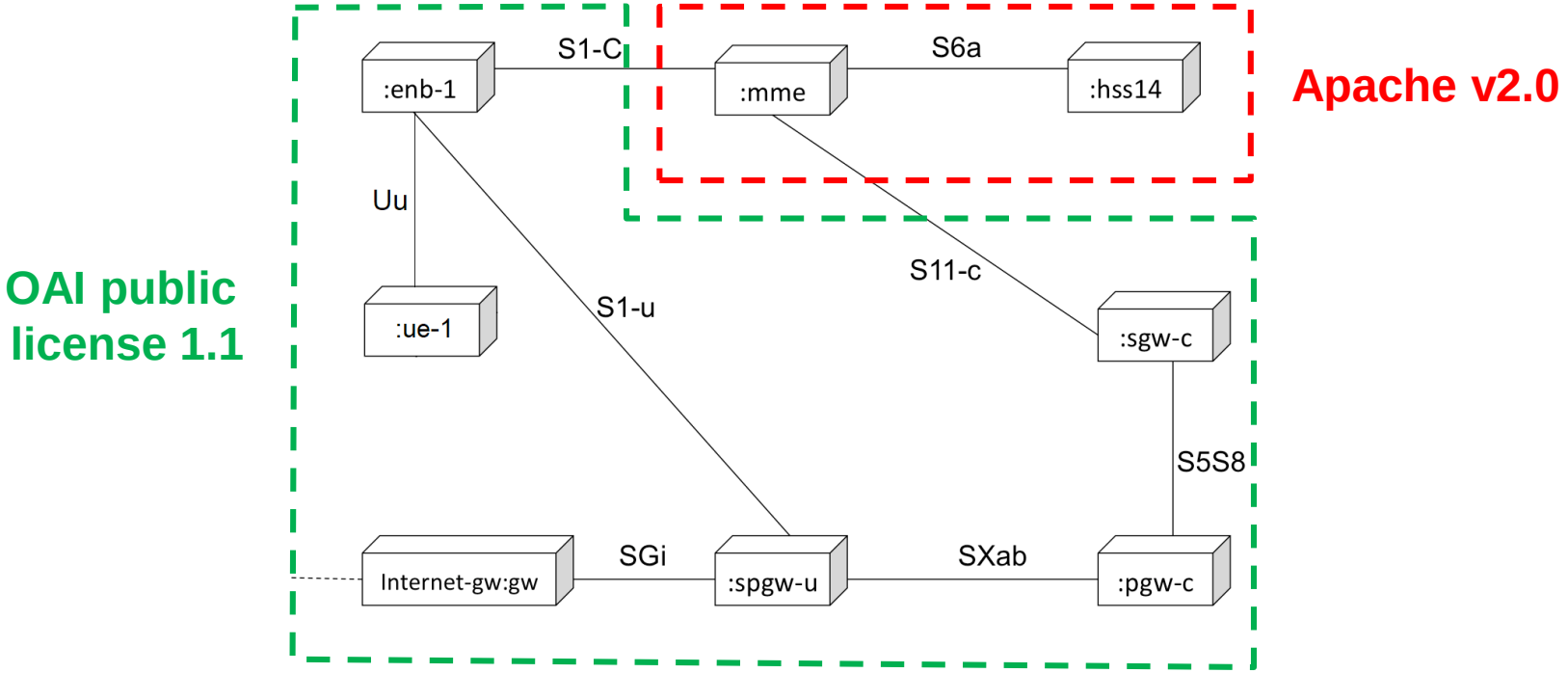

- **OAI public license 1.1 based on Apache V2.0 but allows committing software with patent rights into OSA and still keep licensing rights → inline with 3GPP FRAND**
- **License has also created interest from outside OAI community (e.g. ETSI)**

Releases and Branches (RAN, EPC)

- **Master branch:**
  - Contains major releases and critical fixes
  - Update target: every 6 months
  - Every feature in master must be tested in CI
  - Roadmap defined by technical committee
- **Develop branch:**
  - Contains new features, new tests, bugfixes
  - Updated every week through merge request (MR) process
  - Every MR must pass regression test CI
- **Feature branches:**
  - For cutting edge development (e.g. NB-IoT, 5G-NR, etc)
  - Regular MR with develop desirable (at least should be updated regularly with develop to stay in sync)
  - Might have their own tests
- **Bugfix branches**

OAI Workflow

See also presentation from Raphael on Continuous Integration

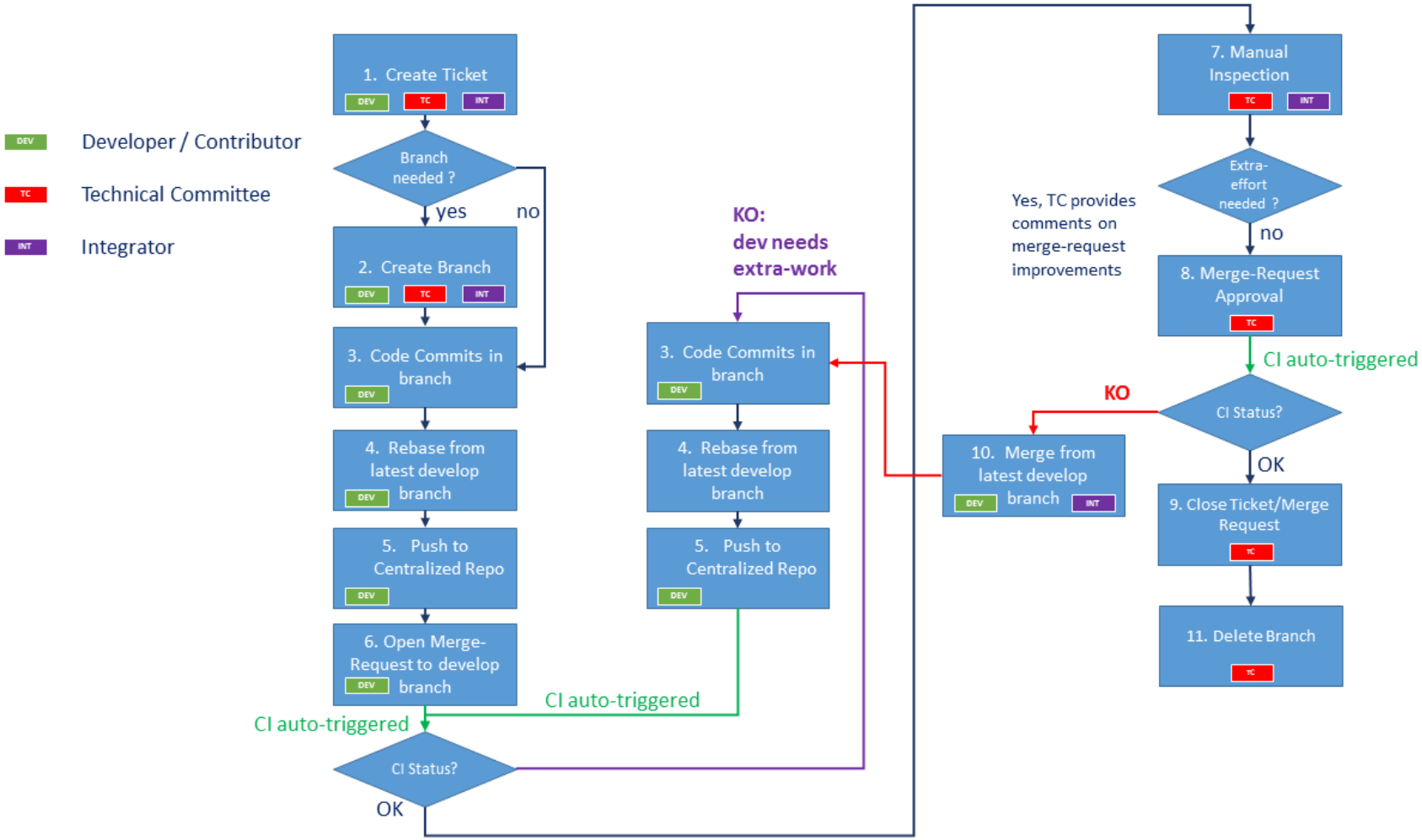

Coming soon to OSA: Mosaic5G

- **Mosaig5G is a collection of tools that sits on top of OAI RAN and CN**

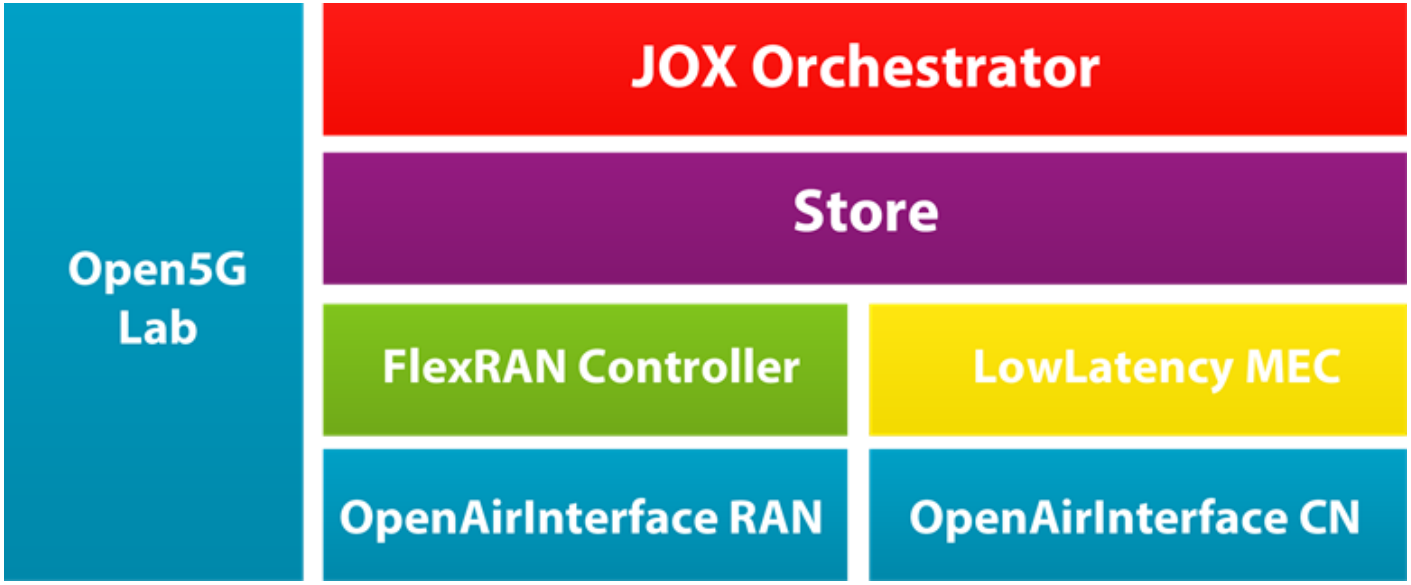

  - https://gitlab.eurecom.fr/mosaic5g
  - http://mosaic-5g.io/
  - See presentation Navid this afternoon

OAI deployment options

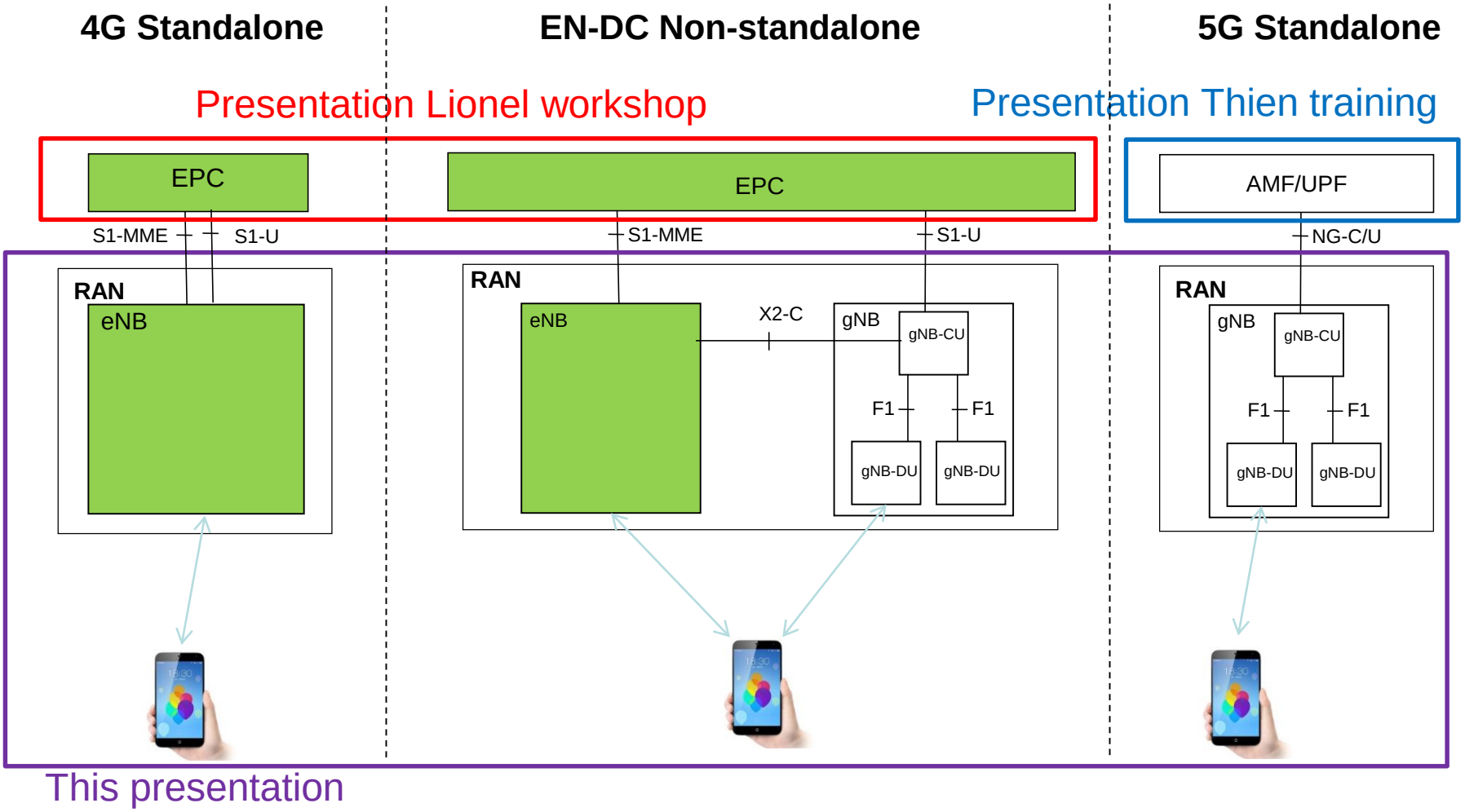

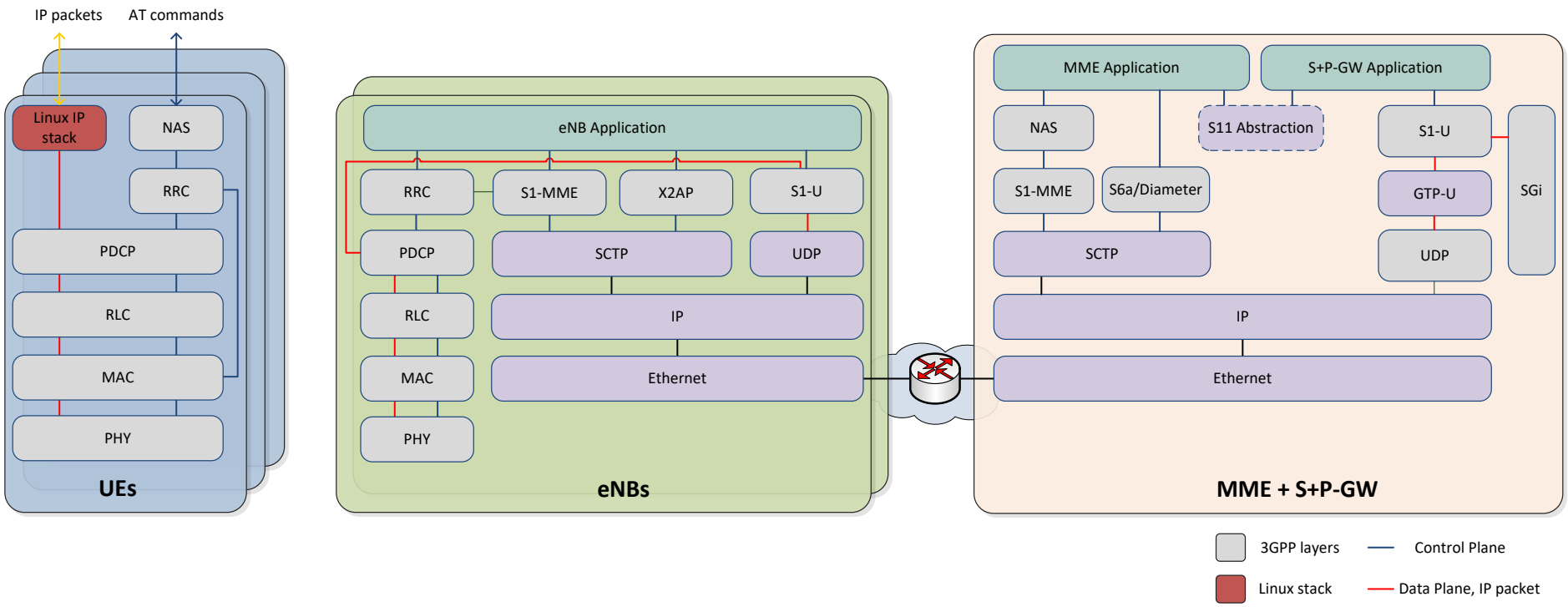

OPENAIRINTERFACE RAN FEATURES

Master branch history

- **v1.0.0 -> January 2019.**
  - This version implements the RAU/RRU architectural splits (FAPI, nFAPI and IF4.5)
  - Repository tree structure prepares future integrations of features such as LTE-M, NB-IoT, and 5G-NR.
  - Preliminary X2 support has been implemented.
  - S1-flex has been introduced.
  - New tools: config library, telnet server, ...
  - A lot of bugfixes and a proper automated Continuous Integration process validates contributions.
- **v1.0.1 -> February 2019: Bug fix for the UE L1 simulator.**
- **v1.0.2 -> February 2019: Full OAI support for 3.13.1 UHD**
- **v1.0.3 -> June 2019: Bug fix for LimeSuite v19.04.0 API**

Master branch history

- **v1.1.0 -> July 2019**
  - New Features
    - LTE-M,
    - X2 interface and handover,
    - CU/DU split (F1 interface),
    - CDRX,
    - eMBMS (UE),
    - multi RRU support
  - Continuous Integration
    - LTE-M,
    - F1 interface,
    - CDRX,
    - OAI UE (standard & “noS1”)
  - Other improvements
    - Build system:
      - ☞ One single build including simulators and “noS1” mode (now a runtime option --noS1)
    - TUN interface now used by default (for UE, eNB-noS1, and UE-noS1)
      - ☞ To use legacy kernel module, Can be disabled using the --nokrnmod 0
    - more code cleanup
    - cppcheck
- **V1.1.1 -> November 2019**
  - Bugfix for CQI reporting

OpenAirInterface eNB features (PHY)

- **The Physical layer implements 3GPP 36.211, 36.212, 36.213 and provides the following features:**
  - LTE release 8.6 compliant, and implements a subset of release 10;
  - FDD and TDD configurations 1 (experimental) and 3;
  - Bandwidth: 5, 10, and 20 MHz;
  - Transmission modes: 1, 2 (stable), 3, 4, 5, 6, 7 (experimental);
  - Max number of antennas: 2
  - CQI/PMI reporting: aperiodic, feedback mode 3-0 and 3-1;
  - PRACH preamble format 0
  - All downlink (DL) channels are supported: PSS, SSS, PBCH, PCFICH, PHICH, PDCCH, PDSCH, PMCH;
  - All uplink (UL) channels are supported: PRACH, PUSCH, PUCCH (format 1/1a/1b), SRS, DRS;
  - HARQ support (UL and DL);
  - Highly optimized base band processing (including turbo decoder).
  - Expected throughputs DL
    - 5 MHz, 25 PRBS/ MCS 28 = 16-17 Mbit/s (measured with COTS UE Cat 3/4)
    - 10 MHz, 50 PRBS/MCS 28 = 34-35 Mbit/s (measured with COTS UE Cat 3/4)
    - 20 MHz, 100 PRBS/MCS 28 = ~70 Mbit/s (measured with COTS UE Cat 3/4)
  - Expected throughputs UL
    - 5 MHz, 20 PRBs / MCS 20 = 9 Mbit/s (measured with COTS UE Cat 3/4)
    - 10 MHz, 45 PRBs / MCS 20 = 17 Mbit/s (measured with COTS UE Cat 3/4)
    - 20 MHz, 96 PRBs / MCS 20 = ~35 Mbit/s (measured with COTS UE Cat 3/4)

OpenAirInterface eNB features (MAC)

- **The MAC layer implements a subset of the 3GPP 36-321 release v8.6 in support of BCH, DLSCH, RACH, and ULSCH channels.**
- **The eNB MAC implementation includes:**
  - RRC interface for CCCH, DCCH, and DTCH
  - Proportional fair scheduler (round robin scheduler soon)
  - DCI generation
  - HARQ Support
  - RA procedures and RNTI management
  - RLC interface (AM, UM)
  - UL power control
  - Link adaptation

OpenAirInterface eNB features (PDCP)

- **The current PDCP is header compliant with 3GPP 36-323 Rel 10.1.0 and implement the following functions:**
  - User and control data transfer
  - Sequence number management
  - RB association with PDCP entity
  - PDCP entity association with one or two RLC entities
  - Integrity check and encryption using the AES and Snow3G algorithms

OpenAirInterface eNB features (RLC) New!

- **New implementation of RLC layer available (to be merged asap)**
- **Implements a full specification of the 3GPP 36-322 release v9.3**
  - RLC UM
    - Segment or concatenate RLC SDUs according to the TB size selected by MAC
    - Include a RLC header in the RLC PDU
    - Duplication detection
    - PDU reordering and reassembly
  - RLC AM (*default with new implementation*)
    - Segmentation, re-segmentation, concatenation, and reassembly
    - Padding
    - Data transfer to the user
    - RLC PDU retransmission in support of error control and correction
    - Generation of data/control PDUs
- **Not implemented in OAI**
  - RLC TM (mainly used for BCCH and CCCH)
    - Neither segment nor concatenate RLC SDUs
    - Do not include a RLC header in the RLC PDU
    - Delivery of received RLC PDUs to upper layers
  - OAI uses direct messages between MAC and RRC

OpenAirInterface eNB features (RRC)

- **Based on 3GPP 36.331 v14.3.0.**
  - System Information broadcast (SIB 1, 2, 3, and 13)
  - RRC connection establishment
  - RRC connection reconfiguration (addition and removal of radio bearers, connection release)
  - RRC connection release
  - RRC connection re-establishment
  - inter-frequency measurement collection and reporting
  - eMBMS for multicast and broadcast
  - X2 Handover
  - Paging
  - DRX (Discontinuous Reception) - CDRX (Connected Mode DRX)

Support for eMTC (Rel 13) in OAI

- **Configuration: lots of new eMTC-related parameters to be fed to L1/L2 stack**
- **RRC**
  - Handling of Rel-13 information elements for eMTC
  - eMTC System Information handling
  - Extra bits in MIB
  - SIB1/SI : Quite Different from legacy LTE (repetitions, frequency-hopping, no DCI)
- **PRACH handling**
  - Support for up to 4 CE levels: different number of repetitions per level => signal combining across repetitions for each level
  - New thread for eMTC PRACH (different parametrization in LTE Cell for eMTC)
- **MPDCCH**
  - Support for EPDCCH allocation (only in MPDCCH configuration for now)
  - 3 new DCI formats
  - New procedures (search space, etc.)
  - No Repetitions yet
  - Limited to 4+2 PRB configuration
- **PDSCH**
  - No Repetitions
- **PUSCH**
  - No Repetitions yet
- **PUCCH**
  - No Repetitions yet (removal of slot-frequency hopping)
- **MAC**
  - RA procedures for eMTC
  - Basic scheduler for testing

Support for eMTC (Rel 13) in OAI

- **Very basic scheduler**
  - 1 downlink subframe every 2 frames with fixed mcs
  - 1 uplink subframe every 2 frames with fixed mcs
  - Currently limited to CEMode A (CE Levels 0,1)
- **New elements in configuration file**
  - targets/PROJECTS/GENERIC-LTE-ENB/CONF/enb.band13.tm1.50PRB.emtc.conf
- **Tested with commercial LTE-M Modules**
  - Nimbelink/Pycom Modules (Sequans Cat-M chipset)
  - Nimbelink Modules (QCOM chipset)
  - Nordic Semiconductor (nRF91 prototype)
- **Integration in OAI CI (Nimbelink, Pycom)**
- **Roadmap:**
  - Implementation of repetition mechanisms for coverage enhancement
  - Implementation of CDRX

OpenAirInterface eNB features (X2AP)

- **The X2AP layer is based on 3GPP 36.423 v14.6.0 and implements the following functions:**
  - X2 Setup Request
  - X2 Setup Response
  - X2 Setup Failure
  - Handover Request
  - Handover Request Acknowledge
  - UE Context Release
  - X2 timers (t_reloc_prep, tx2_reloc_overall)
  - Handover Cancel

eNB Functional Splits

- **IF5: similar to IEEE P1914.3/eCPRI**
- **IF4.5: similar to O-RAN 7.2**
- **IF2: FAPI/nFAPI Small Cell Forum**
- **IF1: same as F1 in 3GPP Rel 15 (F1-U using UDP instead of GTP)**

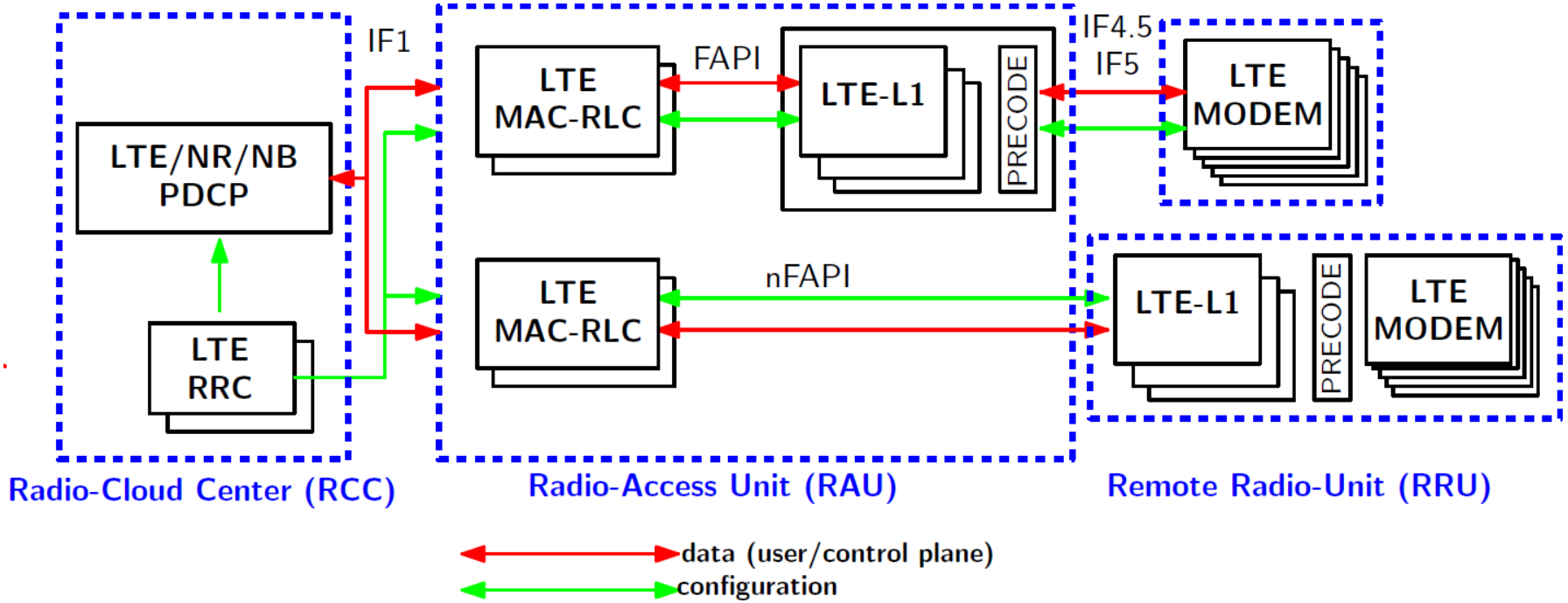

Buggy/Missing/Incomplete Features in develop

- **Essential**
  - TM3/4/8/9/10 : incomplete
    - TM3 PHY (Eurecom) and MAC (Fujitsu) available – to be integrated
  - PUCCH format 2 : incomplete
  - Measurement gap handling : missing
  - Carrier Aggregation : incomplete

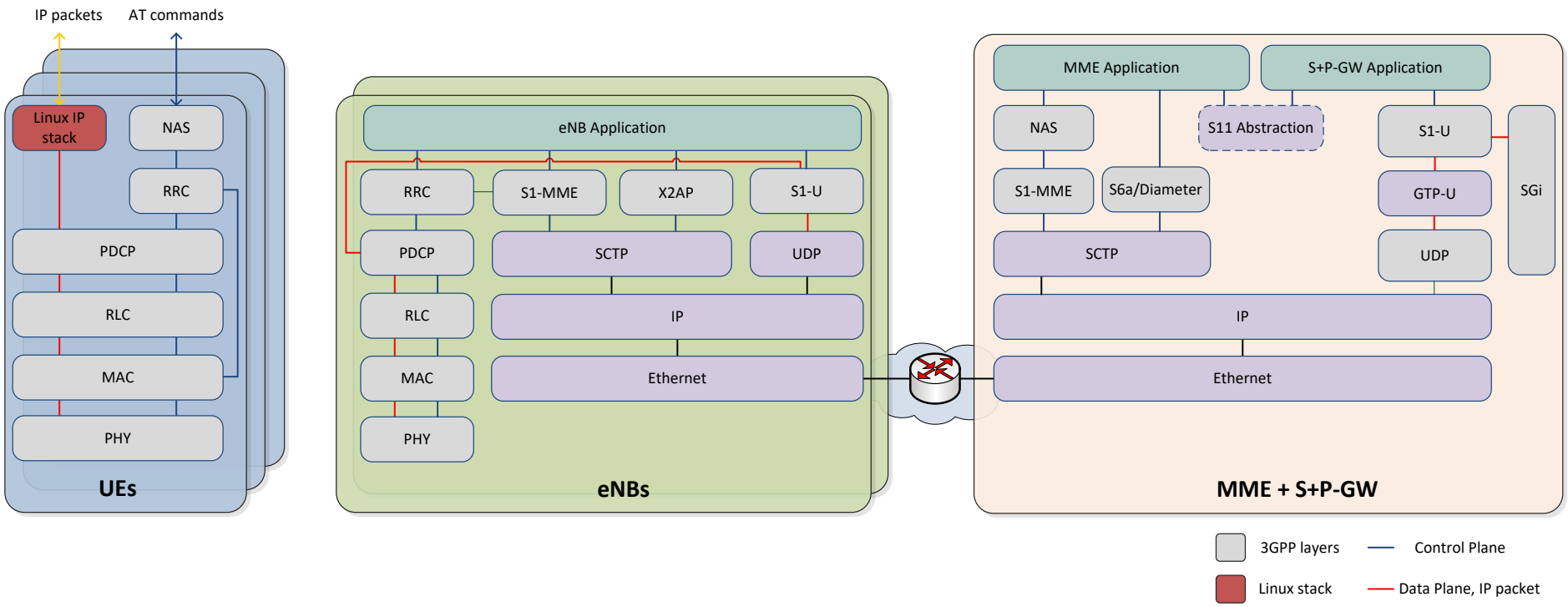

OPENAIRINTERFACE RAN ONGOING FEATURES AND ROADMAP

Very recent and upcoming eNB features

- **Multi RRU handling and synchronization**
- **Rel 12 Dual Connectivity**
- **Rel 13 LTE-M improvements**
- **Rel 14 D2D/Sidelink/ProSe**
- **Rel 14 NB-IoT**
- **Rel 14 feMBMS**
- **Rel 15 5G-NR**

Multi RRU support

- **Contributors** **See dedicated presentation in workshop**
  - Eurecom, Orange
- **Goal:**
  - support multiple RRUs connected to a single RAU over IF 4.5 to form a phase coherent distributed antenna array
  - Needs synchronization at 3 levels: Time, Frequency, Phase
- **Current status**
  - Time synchronization implemented & merged into develop
  - Frequency synchronization: done in hardware
  - Phase synchronization through reciprocity calibration
- **Next steps**
  - Use reciprocity calibration to obtain CSIT from SRS measurements
  - Reactivate beamforming for communication (TM7/8/…)

Dual Connectivity

- **Contributors**
  - Eurecom, UPC
- **Goal:**
  - Rel12 dual connectivity with split radio bearer
- **Status**
  - Implemented split radio bearer over X2-U, C-plane handled independently by 2 eNBs
  - Only works with OAI UE
  - https://github.com/ni/Orca-Dali-oai
- **Roadmap**
  - Split bearer to be reused for EN-DC later

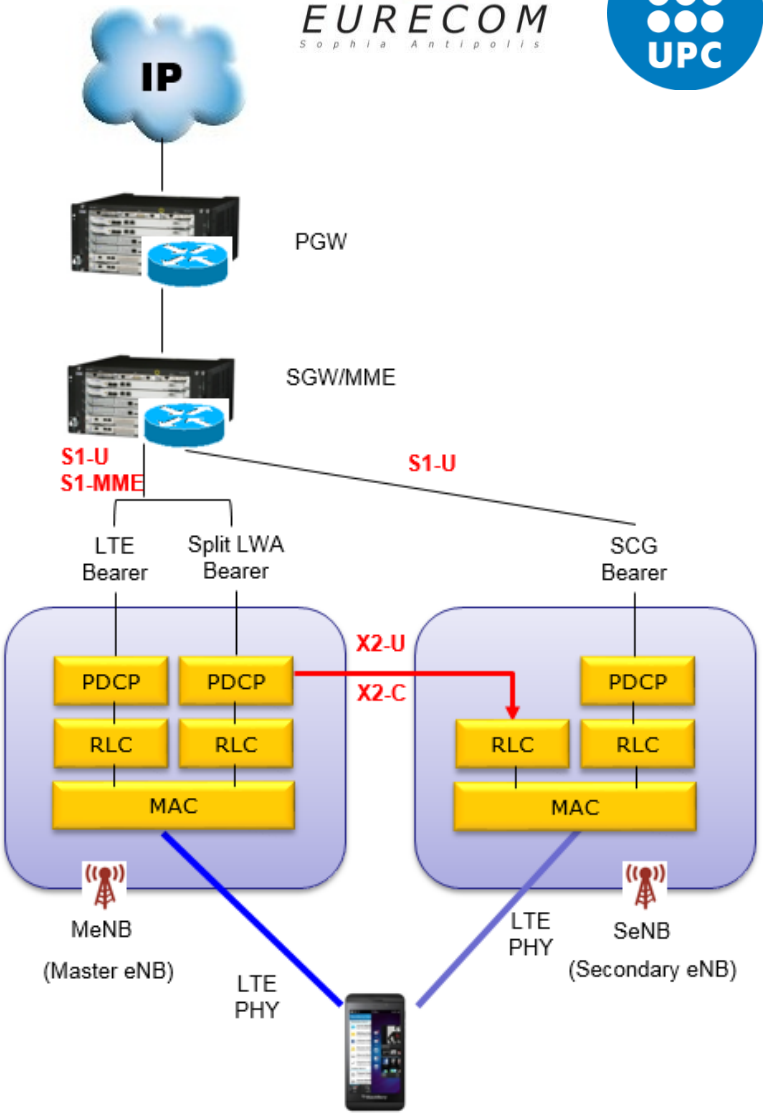

LTE-M roadmap

- **Integration of IoT applications / MEC.**
- **Add the CDRX support**
- **Improve Scheduler**
  - Design of joint LTE/LTE-M scheduling framework
    - How to share resources efficiently
    - Need UE L2 stub for testing scalability (minimal Cat-M1 functionality in OAI UE)
  - handle more than 1 UE
  - handle more than 1 HARQ process
- **Coverage extension options**
  - Repetitions for physical channels

OAI D2D Objectives

- **Interfaces for ProSe applications running on top of OAI at UE**
- **Integration of Rel 14 Sidelink procedures (L1/L2)**
- **Extensions to support UE-Network relaying scenarios**
- **Testing**
  - ProSe application from Perspecta Labs (not public)
  - Public D2D application available for individual testing of PC5 features: multicast traffic, discovery, 1-to-1 connection establishment and Unicast traffic, Relay traffic.
  - Small field deployment with OAI-based UEs and Infrastructure
    - Off-network and relay coverage scenarios

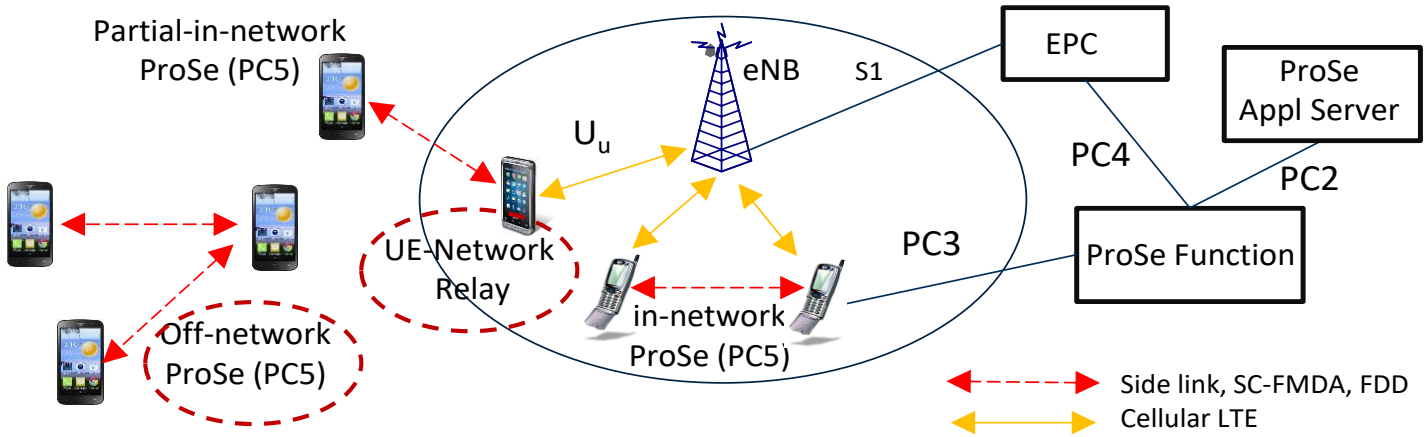

Recent progress and code availability

- **Recent progress**
  - Robustified operation of sidelink L1/L2 procedures in RF mode
    - Multiple bug fixes allowing much more stable performance
  - Integrated support for UE-to-network relay functionality
    - Network level (IP driver) extensions and relay supporting configuration
    - Extensions in OAI RAN and the interfaces with the RF USRP B210 devices to support UL/DL and SL operations concurrently
    - Extensions at the UE NAS layer and the Core Network to integrate relay functionality signaling
- **Code availability**
  - OAI RAN Code available at LTE-sidelink branch of public OAI-RAN repository
    - To be merged with develop branch soon
  - D2D testing application publicly available
    - https://gitlab.eurecom.fr/tien-thinh.nguyen/d2d-l3-stub
- **Roadmap**
  - Extension to V2X (LTE V2X rel. 14/15), both mode 3 and mode 4
  - Multi-hop Mesh (using LTE V2X rel. 14 mode 4 as L2) (OSLR/BATMAN at L2)

NB-IoT

- **Contributors**
  - Eurecom, Bcom, NTUST, Nokia

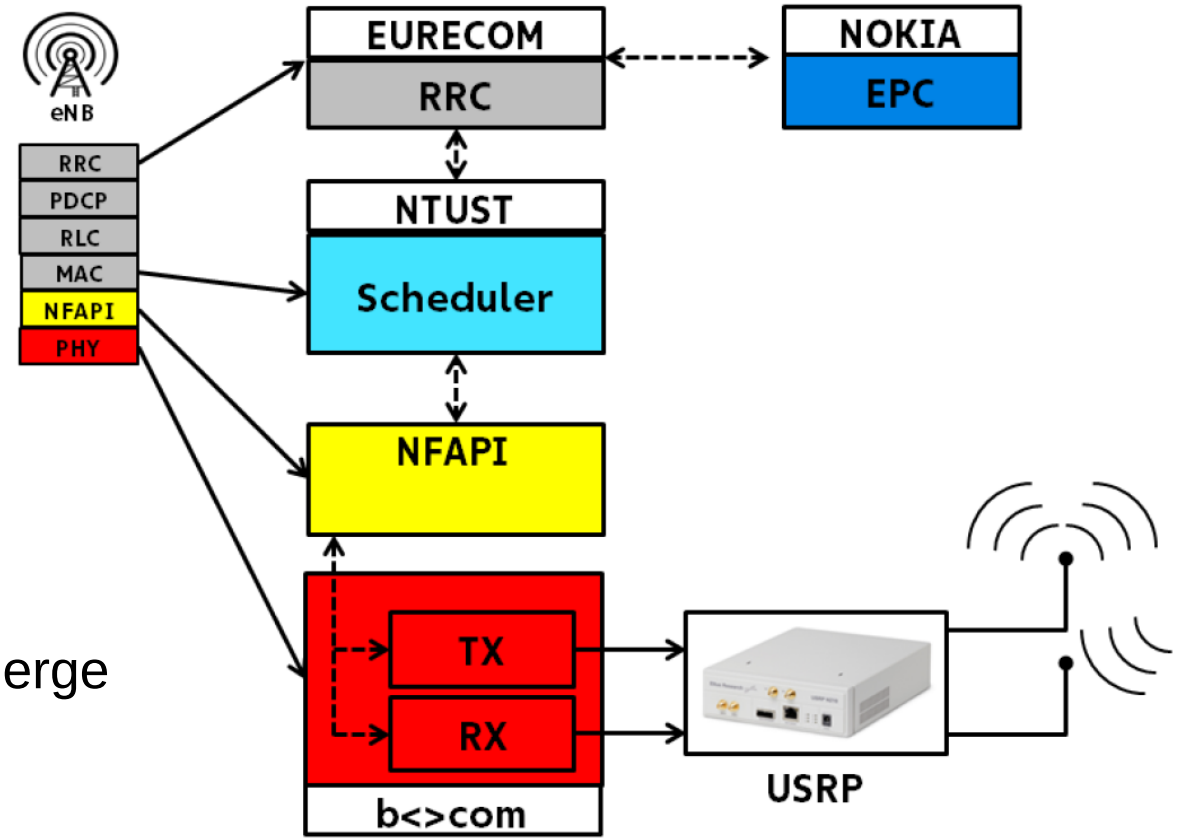

- **Branch**
  - Develop-nb-iot
  - Develop-nb-iot-merge

NB-IoT

- **Status develop-nb-iot**
  - Based on very old version (>2 years) of develop-branch
  - PHY ready & demonstrated with fixed scheduler up to Msg4
  - MAC scheduler (UL/DL) and FAPI procedures ready
  - Successful reception of Msg 5 (RRCConnectionSetupComplete) at eNB
  - S1AP connection to EPC (Nokia ltebox) ok (InitialUEMessage, Downlink NAS transport)
  - Downlink_NAS_Transport sent to UE, but UE does not accept it
- **Status develop-nb-iot-merge**
  - Goal: benefit from improvements in develop in nb-iot, have a common target
  - Merged with develop summer 2019 (v1.1.0)
  - Work ongoing, issues with configuration
- **Roadmap (unchanged)**
  - Complete end-to-end validation
  - non-IP CIoT services (requires core support)
  - Integration of multi-carrier PUSCH
  - Integration into develop

feMBMS

vicomtech

See dedicated presentation in workshop

- **Contributors**
  - Javier Morgade (Vicomtech)
- **Current status in develop**
  - UE PHY:
    - LTE MBMS-dedicated cell (feMBMS) procedures subset for LTE release 14
    - LTE non-MBSFN subframe (feMBMS) Carrier Aquistion Subframe-CAS procedures (PSS/SSS/PBCH/PDSCH)
    - LTE MBSFN MBSFN subframe channel (feMBMS): PMCH (CS@1.25KHz) (channel estimation for 25MHz bandwidth) (experimental)
  - UE MAC:
    - MBMS-dedicated cell (feMBMS) RRC interface for BCCH
    - MBMS-dedicated cell (feMBMS) RRC interface for MCCH, MTCH
  - UE RLC:
    - MBMS-dedicated cell (feMBMS) SI-MBMS/SIB1-MBMS management
- **Under integration (Ongoing merge request)**
  - Above procedures on eNB side
  - MCE (Multicast Control Entity) --> MCE_APP colocated with eNB
  - M2 Interface / M2AP (eNB) --> MBMS Control Interface in between eNB and MCE
  - M3 Interface / M3AP (eNB) --> MBMS Control Interface in between MCE and MME (M3AP support will be added for OAI-CN)
  - M1 Interface / MBMS-GW support for OAI-CN

5G New Radio

- **Contributors**
  - Eurecom, Nokia BL, Orange, Fraunhofer, IISc, TCL, NTUST
- **Goals**
  - Phase 1 (end 2019): “noS1” 5G-NR only (with pre-configured gNB and UE, no core network)
  - Phase 2 (Feb 2020): E-UTRA – NR dual connectivity (non-standalone architecture option 3a, with 4G core)
  - Phase 3 (2020): standalone (with 5G core)

Development phases

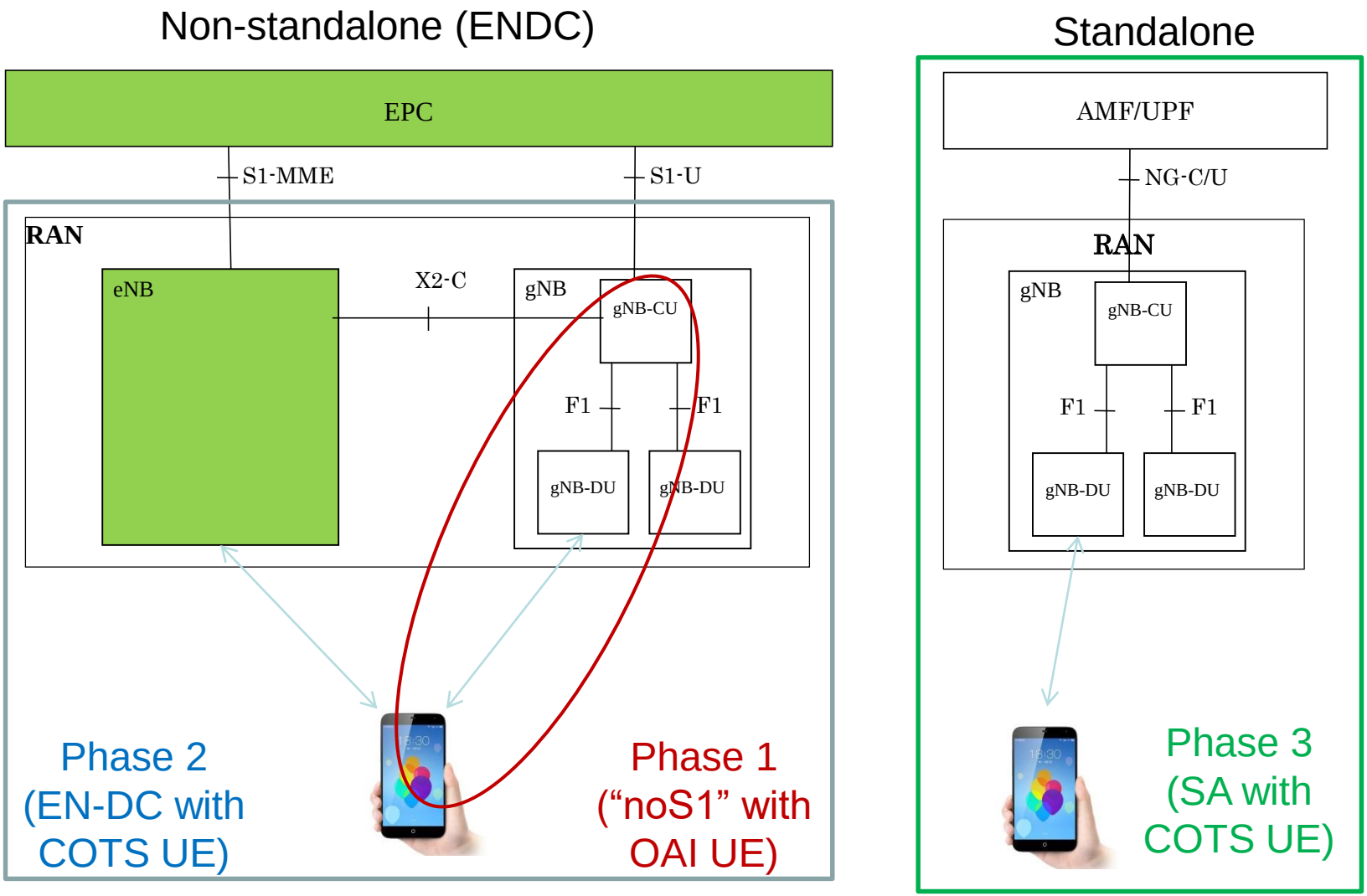

Status of OpenAirInterface 5G-NR software

- **PHY (gNB & UE)**
  - Highly efficient 3GPP compliant LDPC encoder and decoder (BG1 and BG2 supported)
  - Highly efficient 3GPP compliant polar encoder and decoder
  - Encoder and decoder for short blocks
  - NR-PSS and NR-SSS (gNB validated with R&S FSW)
  - NR-PBCH (gNB validated with R&S FSW)
    - Supports up to 8 SSB
    - Flexible periodicity
  - NR-PDCCH (gNB validated with R&S FSW)
    - common search space configured by MIB
    - user-specific search space configured by RRC
    - DCI formats: 00, 10
  - NR-PDSCH (gNB validated with R&S FSW)
    - Single symbol DMRS, dmrs-TypeA-Position Pos2, DMRS configuration type 1
    - PDSCH mapping type A
  - NR-PUSCH (validated in real-time modem)
  - NR-PUCCH (validated in simulation only)
    - Format 0 (ACK/NACK)
  - NR-PRACH (partially validated in simulation)
    - Formats 0,1,2,3, A1-A3, B1-B3
- **PHY (UE specific)**
  - Initial sync and selection of strongest beam
  - Time tracking based on PBCH DMRS
  - Frequency offset estimation
  - First version of dual stream receiver for PDSCH

LDPC Options

- **Software defined (included in OAI)**
  - Developed by TCL
  - Integrated in develop-nr
  - Decoding latency 1 codeword, BG1, Z=384, B=8448, 5 iterations: Rate 1/3: 214.6µs, Rate 2/3: 124.6µs, Rate 8/9 83.6µs
- **Offload to GPU**
  - Developed by NCTU using CUDA
  - Available in branch 445-LDPC-implementation-on-GPU
  - Decoding latency 1 codeword, BG1, Z=384, B=8448, 5 iterations: Rate 1/3: 60µs (without DMA transfers)
- **Offload to FPGA**
  - IP core developed by Creonic, Interface to OAI developed by SYRTEM
  - See dedicated presentation by TCL during workshop

Status of OpenAirInterface 5G-NR software

blue = new

- **gNB**
  - **RRC**
    - Import of 38.331 RRC (Rel15) messages using asn1c (new version)
    - Application to read configuration file and program gNB RRC
    - Generation of MIB (validated with R&S FSW)
    - RRC -> MAC configuration
  - **RLC**
    - Updated to Rel 15 specs
    - To be integrated
  - **MAC**
    - MAC -> PHY configuration using FAPI P5 interface
    - MAC dummy scheduler (fixed allocations) using FAPI P7 interface
    - Header generation (incl timing advance)
    - “noS1” mode (DL): interface with 4G RLC, PDCP, and TUN interface to inject user-plane traffic
  - **X2AP**
    - Update to Rel 15 specs
    - Connection to 4G eNB
- **eNB**
  - Update of RRC and X2AP to Rel15
  - Configuration of 5G-NR measurements
- **UE**
  - Initial sync and detection of MIB
  - MAC -> PHY Configuration of PHY via UE FAPI P5 interface
  - Basic MAC to control PHY via UE FAPI P7 interface
  - 5G RLC, to be integrated
  - “noS1” mode (DL): interface with 4G RLC, PDCP, and TUN interface to receive user-plane traffic

Demonstration MASS-START 9.10.2019

- In this demo:
  - Downlink only (fixed scheduling)
  - Over the air

- gNB split in BBU (in server room) and RRH (in lab), connected by fiber
- UE at the other end of corridor
- Throughput limited

Roadmap for EN-DC (Feb 2020)

- **UE**
  - PHY: Improve Throughput
    - Some improvements were made in simulation, but still issues in real-time
  - MAC: procedures for handing UL DCI
    - Today PUSCH parameters are hardcoded
- **UE & gNB**
  - Complete UL “noS1” mode
  - Stabilize real-time performance
    - Today main target is USRP N3x0
    - Poor performance when using 4 channels at full BW
    - Investigation of DPDK
  - FR 2
  - MAC
    - Integration of PRACH procedures (RACH and MSG2)
    - Integration of PUCCH procedures
    - HARQ handling
  - Integration of new RLC
- **gNB:**
  - Synchronization of gNB and eNB (specs require ½ slot)
  - X2 procedures/messages
- **eNB**
  - X2 procedures/messages
  - RRC Reconfiguration

Functional splits in OAI 5G

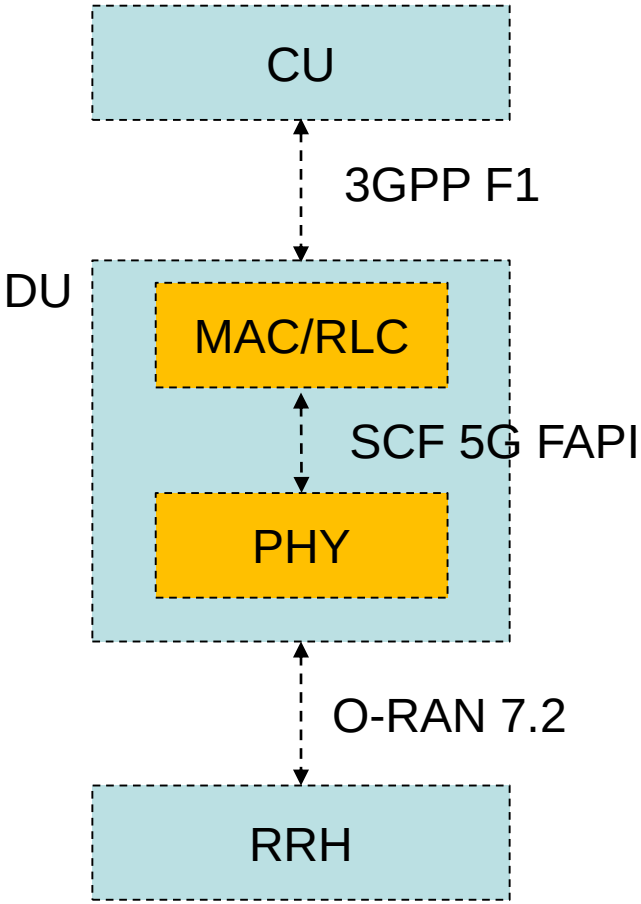

- **F1**
  - F1-C done for LTE, to be integrated in NR
  - F1-U partially done for LTE (not using GTP yet) – to be done for NR
  - To be done (Q1 2020)
- **5G FAPI**
  - today all L1 procedures use a preliminary version of 5G FAPI
  - update to SCF specs ongoing (Q4 2019)
  - nFAPI to be done (SCF specs ongoing, 2020)
- **Fronthaul**
  - O-RAN 7.2 or IF4.5 (upgrade from LTE)
  - To be done (Q1 2020)

Overall architecture roadmap

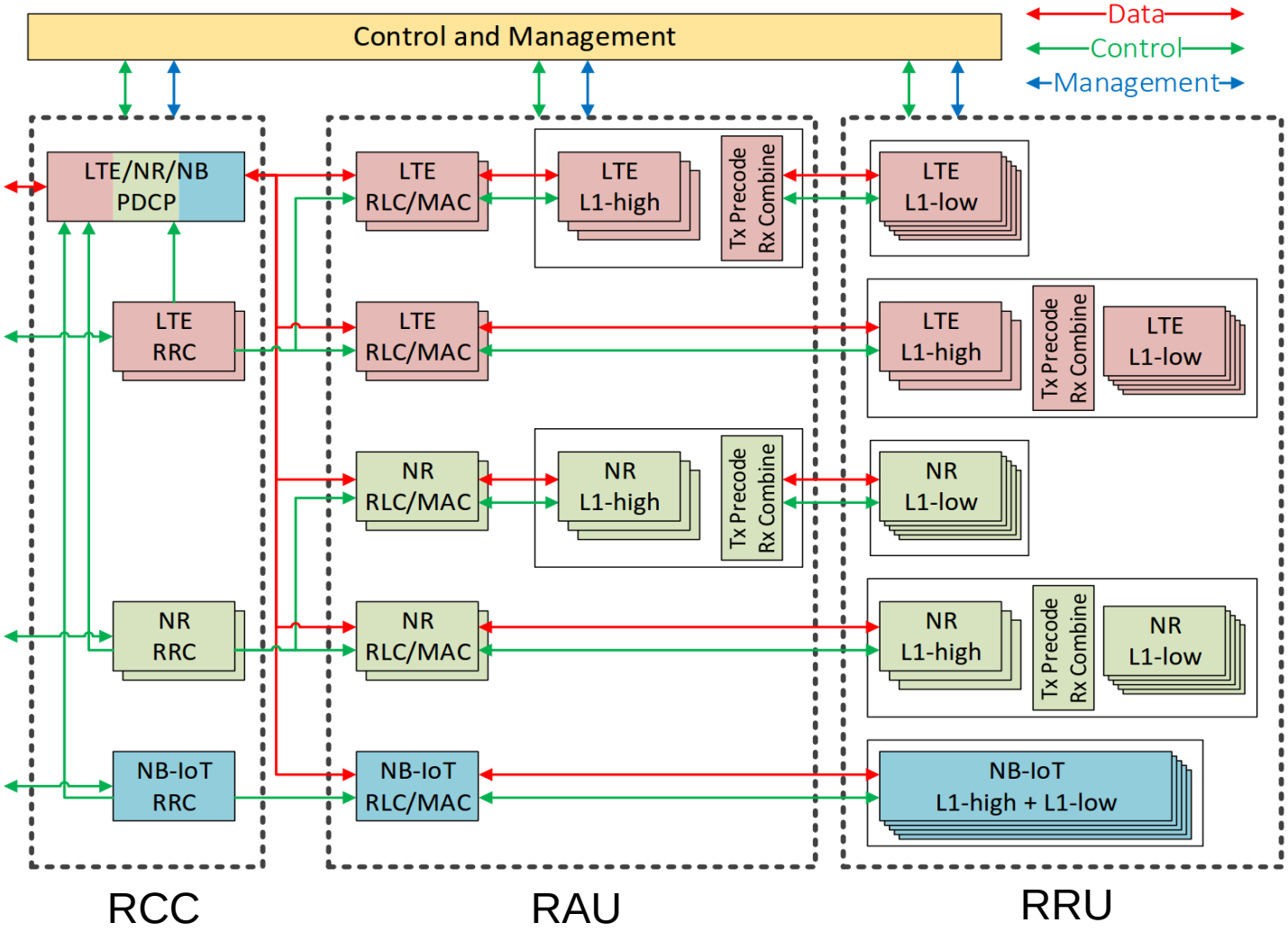

HARDWARE TARGETS

Hardware Requirements

- **SDR platform**
  - ExpressMIMO2 (discontinued)
  - USRP B2x0, X3x0, N3x0 (recommended)
  - Blade RF
  - LMS-SDR
  - Skylark Iris
  - Syrtem

- **Host PC**
  - 4G: A powerful x86 PC
    - Intel Core i5, i7, i9
    - Intel Xeon
    - >=4 cores, >= 3GHz, SSE 4, AVX
  - 4G RRH: Low-cost x86 PC
    - Up board (up2), Euclid board
  - 5G: x86 server or PC
    - Inter Core i9
    - Intel Xeon
    - >= 16 cores >= 3GHz, AVX2

- **Antennas, Duplexers, etc**

Comparison

*needs external RF elements
** depends on daughterboard
*** subjective to the author ☺

	USRP B210	USRP X310	USRP N310	Blade RF 2	LMS SDR
Data acquisition	USB3	10Gbit EtherNet, PCIexpress	10Gbit Ethernet	USB3	USB3
MIMO and bandwidth capabilities	2x1 MIMO 20MHz or 2x2 MIMO 10MHz	2x2 MIMO, 120MHz	4x4 MIMO 100MHz	2x2 MIMO 20MHz	2x2 MIMO 20MHz
RF chip	AD9361	n/a**	AD9371 (x2)	AD9361	LMS7002M
Frequency range	70MHz – 6GHz	DC-6GHz (depends on daughterbrd)	10 MHz – 6GHz	47MHz to 6GHz	300 MHz – 3.8GHz
Price	€1,130	~€5,000	~€10,000	$480 - $720	$299
Duplexing	FDD* or TDD*	FDD* or TDD*	FDD* or TDD	FDD*	FDD* or TDD*
Output power	10dBm	n/a**	12-18dBm	8dBm	10dBm
Noise figure	<8dB	n/a**	5.5-7.5dB	?	<7dB
EVM* **	Very good	Excellent	Very good	???	Average
Open source	FGPA/driver	FPGA/driver	FPGA/Driver	All	All
Compatibility	4G/5G (40MHZ with ¾ sampling)	4G/5G (80MHz with ¾ sampling)	5G up to 100MHz	4G	4G

Other experimental targets

- **Epiq Sidekiq**
  - Based on AD 9361
  - Mini PCIe or M.2 form factor
- **CPRI - PCIexpress**
  - IT Avero
  - Based on Xilinx eval board
- **CPRI gateway**
  - Bell Labs
  - Based on Xilinx or Intel platform
- **Skylark Iris platform**
  - Based on Lime platform
  - Scalable for massive MIMO
- **SYRTEM UED platform**
  - Based on Xilinx ZC706 eval board + AD9371 daughterboard
  - 2 full duplex channels with up to 122.88 MHz sampling
  - Not 100% open source

Epiq Sidekiq

Skylark Iris

SYRTEM UED

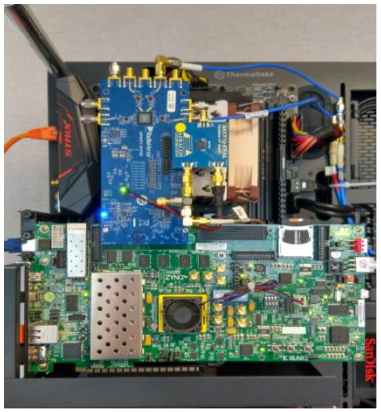

OAI eNB + OAI UE

INSTALLATION

Software Requirements

- **Operating system**
  - Ubuntu >= 18.04
    - works for both openairinterface5g, openair-cn, openair-cn-cups
    - For real-time operation, a low-latency kernel is recommended
    - For new P/S-GW, no kernel module patches required
    - See details on Wiki
  - CentOS/Redhat Linux release >= 7
    - Better real-time performance than Ubuntu low-latency
- **Get code from our gitlab server**
  - RAN (eNB+UE): https://gitlab.eurecom.fr/oai/openairinterface5g
    - Branch develop latest features (recommended)
    - Branch develop-nr for gNB and nrUE
  - EPC (MME, HSS)
    - https://github.com/OPENAIRINTERFACE/openair-cn
  - EPC (SPGW-C, SPGW-U)
    - https://github.com/OPENAIRINTERFACE/openair-cn-cups

OpenAirInterface5G directories

- **ci-scripts**
- **cmake_targets**
  - New directory for building all the targets
  - Contains “mother” build_oai script
- **executables (in develop-nr)**
  - nr-softmodem, nr-uesoftmodem
- **targets**
  - Hardware specific code (drivers, tools, etc)
  - lte-softmodem, lte-uesoftmodem
- **openair1**
  - Basic DSP routines for implementing subset of LTE specifications under x86 (36.211, 36.212, 36.213 3GPP specifications)
  - Channel simulation, sounding and PHY abstraction software,
- **openair2**
  - MAC/RLC/PDCP/RRC
- **openair3**
  - Contains interfaces S1-C, S1-U (GTP, SCTP, S1AP) and NAS UE
- **common/utils**
  - Utilities such as the T tracer or the ITTI

Compiling OpenAirInterface5G

- **Top-level build script ./build_oai located in**
  - cd openairinterface5g/cmake_targets
- **Recent simplifications**
  - No more separate executables for “noS1”, basic simulator, etc
  - → there is only one lte_softmodem and lte-uesoftmodem!
- **Compilation options**
  - -I installs additional required software
  - -w <hw_target> select HW target
  - --eNB compiles the lte-softmodem
  - --UE compiles the lte-uesoftmodem and UE NAS parts
  - --lte-simulators compiles the unitary simulators
  - -h help
- **This creates executables in openairinterface5g/targets/bin**
  - Liboai_device.so symbolic link to library of current hardware (oai_usrpdevif.so, rfsimulator.so, tcp_bridge_oai.so, …)
  - Liboai_eth_transpro.so Ethernet transport library (IF4.5 or IF5 split)
  - Libparams_libconfig.so Library for parameter handling
  - Libcoding.so Library for channel coding
  - Nasmesh.ko and rb_tool: kernel driver and ioctl tool for noS1
  - ue_ip.ko, usim, nvram, conf2uedata: UE NAS driver (if TUN interface is not used)
  - dlsim, ulsim, …: unitary simulators

Simulators

- **Simulators**
  - ulsim/dlsim: unitary simulator for PHY
  - Basic simulator / rfsimulator
  - L1 simulator: uses IF4.5 interface
  - L2 FAPI simulator: uses nFAPI interface

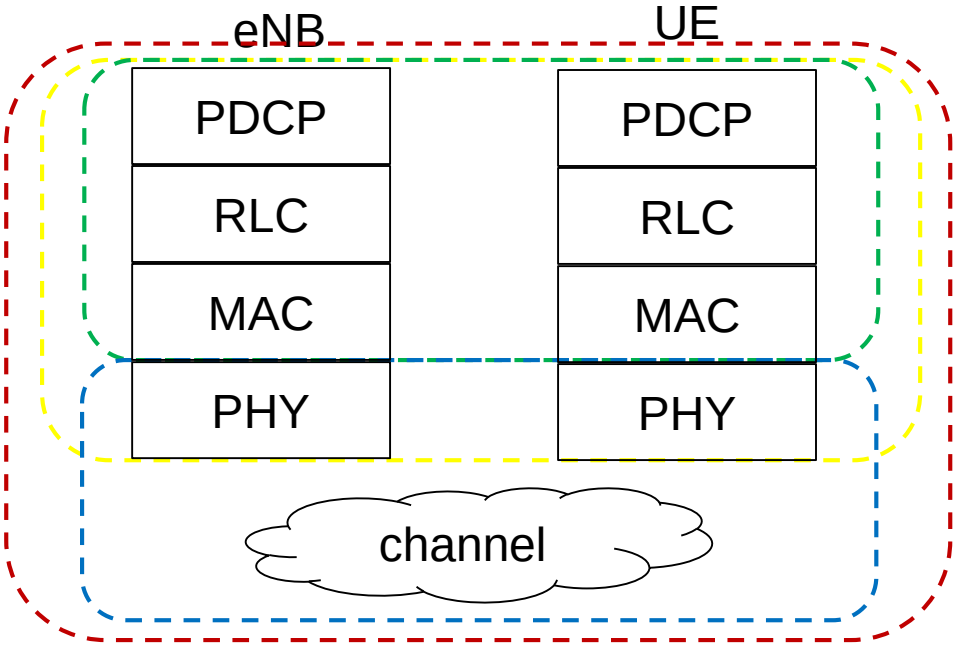

Basic simulator

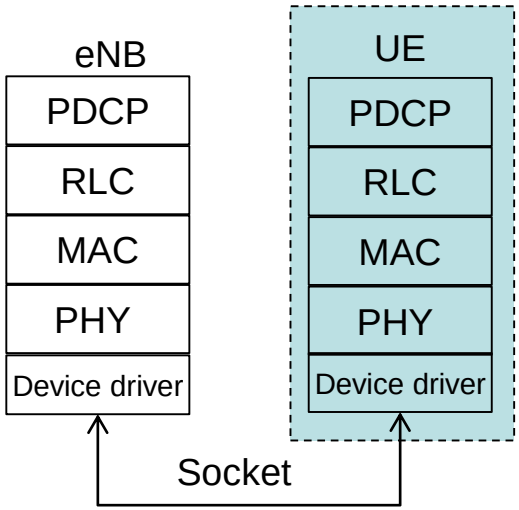

L2 simulator

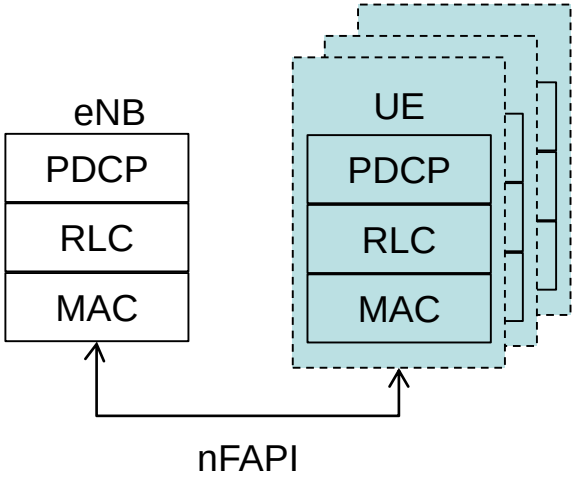

rfsimulator

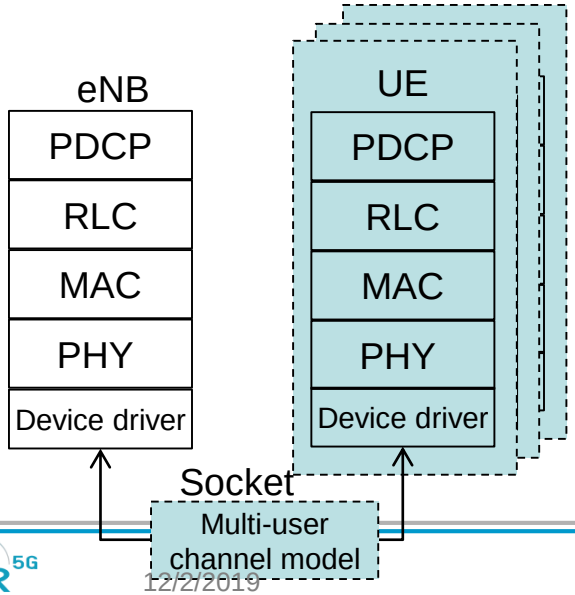

L1 simulator

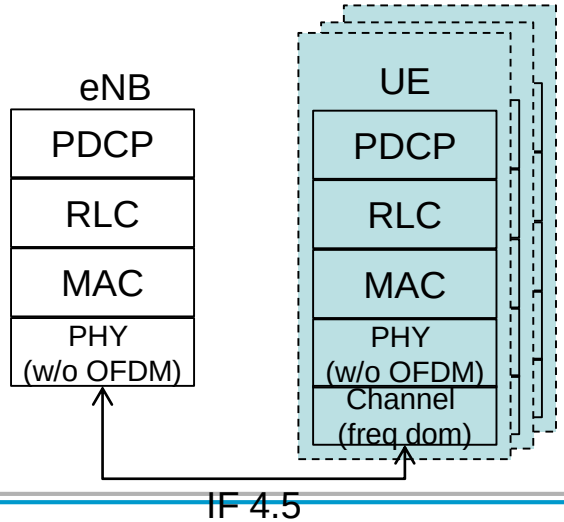

Unitary Simulators

- **Simulates one physical channel (TX and RX) using (standardized) channel models**
  - Good for debugging and performance analysis (Monte-Carlo simulations)
- **Build using**
  - ./build_oai –phy_simulators
- **In develop**
  - ulsim:
  - dlsim
- **In develop-nr**
  - Polartest, ldpctest, smallblocktest
  - Nr_pbchsim, nr_prachsim,
  - nr_dlschsim, nr_ulschsim, nr_pucchsim
  - nr_dlsim, nr_ulsim,

How to connect COTS phone to OAI eNB

- **Additional requirements**
  - Core network (e.g., OAI EPC, see later in training)
  - Sim card with corresponding parameters
- **Compile eNB**
  - ./build_oai –w USRP --eNB
- **Configure eNB**
  - targets/PROJECTS/GENERIC-LTE-EPC/CONF/
  - Select the config file that is most appropriate for your configuration (Band and Hardware)
  - Check
    - MCC, MNC, TAC (need to match EPC)
    - downlink_frequency, bandwidth, etc
    - IP addresses of S1-MME and S1-U interfaces
- **Run eNB**
  - sudo ./lte-softmodem –O <file.conf>

How to connect OAI UE to OAI eNB

- **Compile UE**
  - ./build_oai –w USRP –UE
  - Initialize NAS (except when using TUN interface)
    - “init_nas_s1 UE” or “init_nas_noS1”
- **Run UE**
  - sudo ./lte-softmodem –U –C <freq> -r [25|50|100] –ue-scan-carrier –ue-txgain xx –ue-rxgain yy (-d) (--noS1 --nokrnmod 0)

How to setup RCC and RRU

- **RCC**
  - Check RCC parameters in RCC config file
    - IF name, local and remote IP addresses and ports
    - local_rf = "no"
    - tr_preference = "udp_if4p5“
  - ./lte-softmodem –O <file.conf>
- **RRU**
  - Check RRU parameters in RRU con
    - IF name, local and remote IP addresses and ports
    - local_rf = “yes"
    - tr_preference = "udp_if4p5“
  - ./lte-softmodem –O <file.conf>

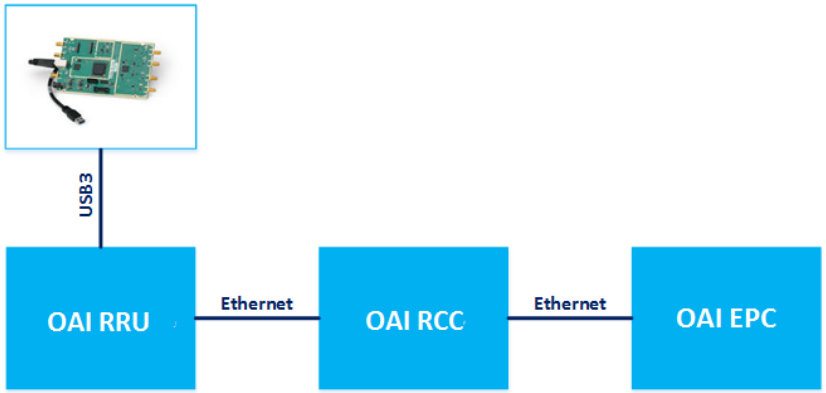

Troubleshooting

- **eNB not connection to MME / RRH**
  - Check IP addresses in config files
  - Check MCC, MNC matching
- **I get a lot of UUUs and LLLs**
  - Check the performance setting of CPU (C-states, CPU frequency)
  - Check USB3 connection (some cables are bad)
- **Phone does not connect**
  - Analyze S1AP messages in wireshark
  - Check keys in SIM card and HSS
  - …
- **Throughput is very low**
  - Check radio conditions: duplexer, antennas, interference

DEBUGGING TOOLS

The T tracer

- **The T tracer is a framework to debug and monitor the eNB softmodem.**
- **Combines logging, timing analysis, signal visualization, MAC PDU analysis (with wireshark)**
- **It is made of two main parts:**
  - an events collector integrated to the real-time processing,
  - a separate set of programs to receive, record, display, replay and analyze the events sent by the collector.
- **Can work locally or over network**

The T tracer: usage of GUI

- **eNB is compiled by default with –T-tracer option:**
  - Otherwise disable with –disable-T-tracer
- **Compile eNB GUI:**
  - cd openairinterface5g/common/utils/T
  - make
- **Run lte-softmodem normally**
  - sudo ./lte-softmodem –O <…> --T_stdout 0
- **Run T tracer GUI**
  - ./enb –d ../T_messages
- **Other features**
  - Recording & replay
  - VCD file generation (for gtkwave)

eNB GUI

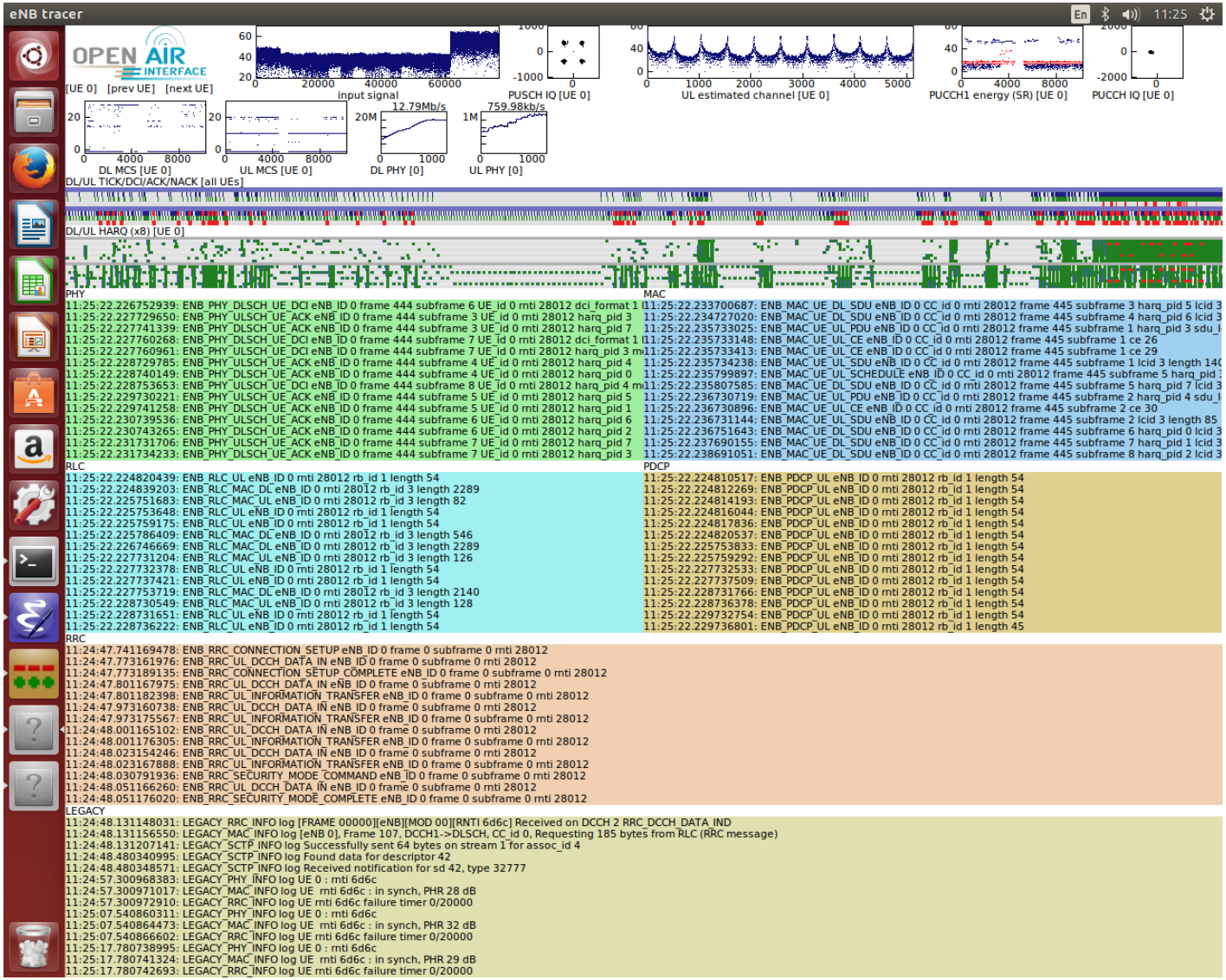

- HARQ ACK
- HARQ NAK
- New DCI
- Retr. DCI

Telnet server

- **Telnet server can be used to show and change parameters at runtime**
  - Log level and verbosity
  - Threads and their priority
  - Some PHY parameters (e.g. turbo iterations)
- **Easily extendable**
- **Usage**
  - ./build_oai –w USRP –eNB –build-telnetsrv
  - sudo ./lte-softmodem –O <…> --telnetsrv
  - Telnet 127.0.0.1 9090
  - Use online help

BACKUP

Use case I: classical 3GPP network

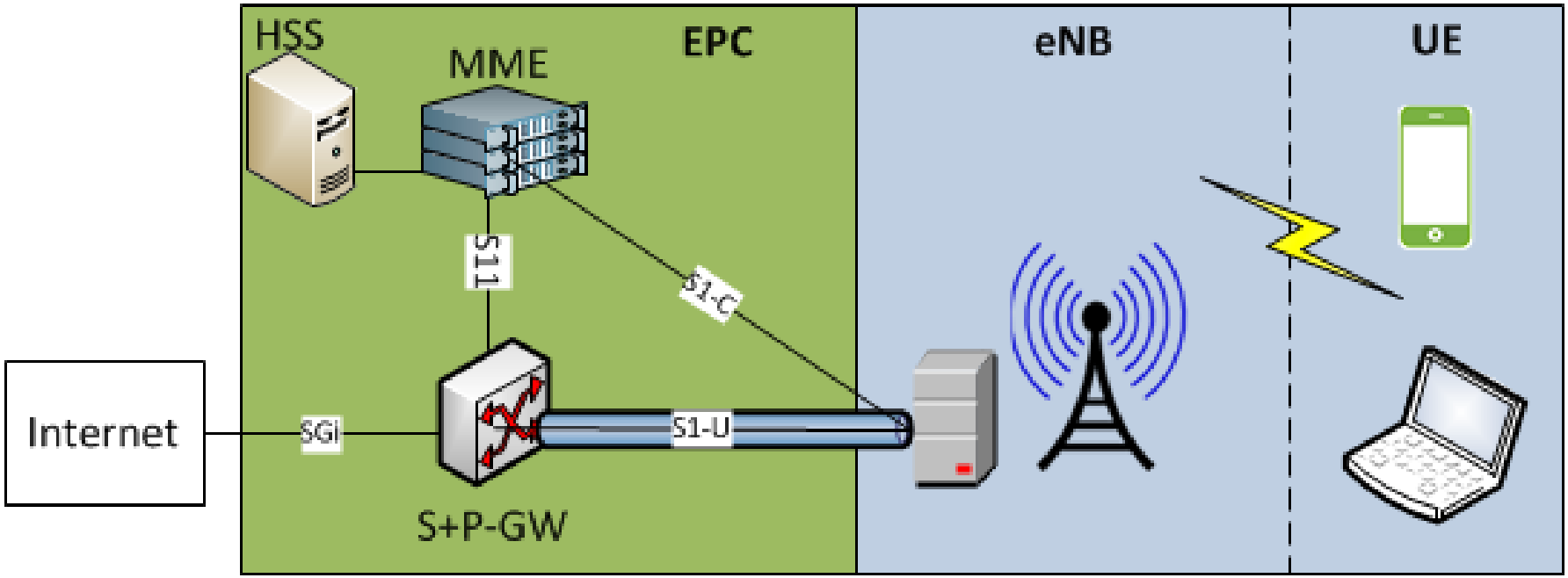

- OAI EPC
- Commercial/3rd party EPC

+

- OAI eNB
- Commercial/3rd party eNB

+

- OAI UE
- COTS UE

Use case II: simplified network

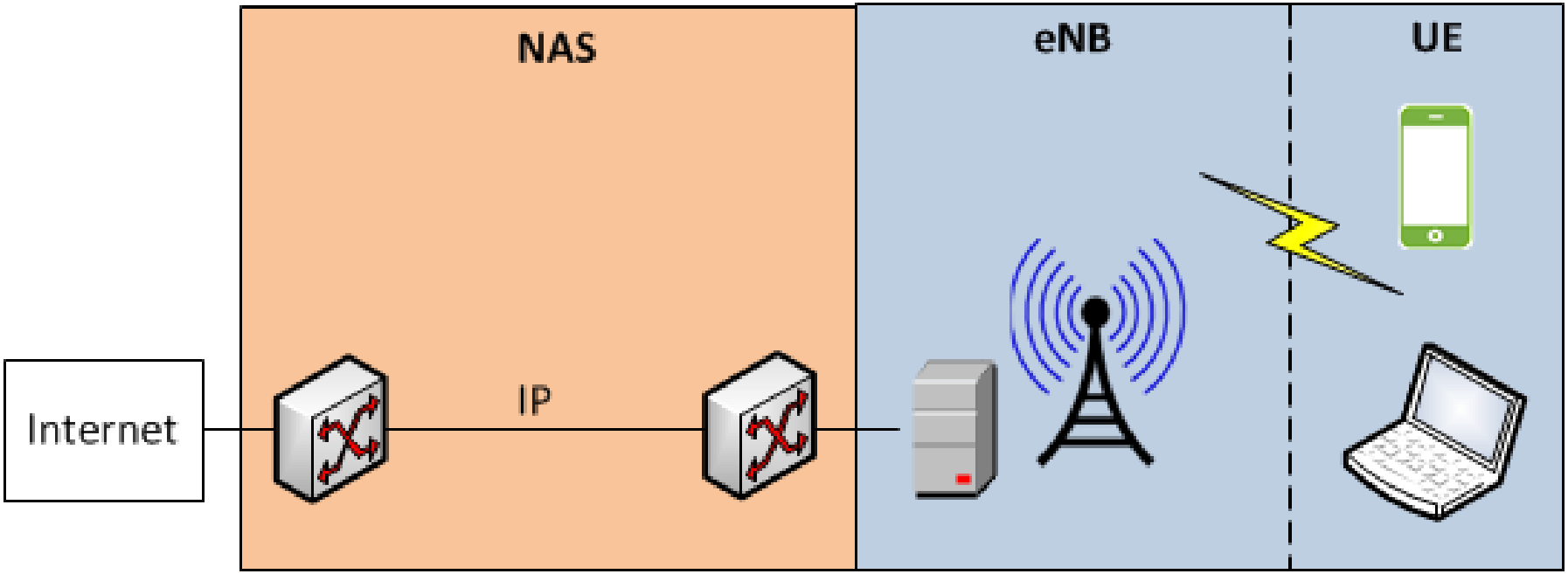

- **Non-3GPP setup (no-S1 mode):**
  - OAI eNB <--> OAI UE

Use case III: cloud-RAN

Main target of EURECOM deployment

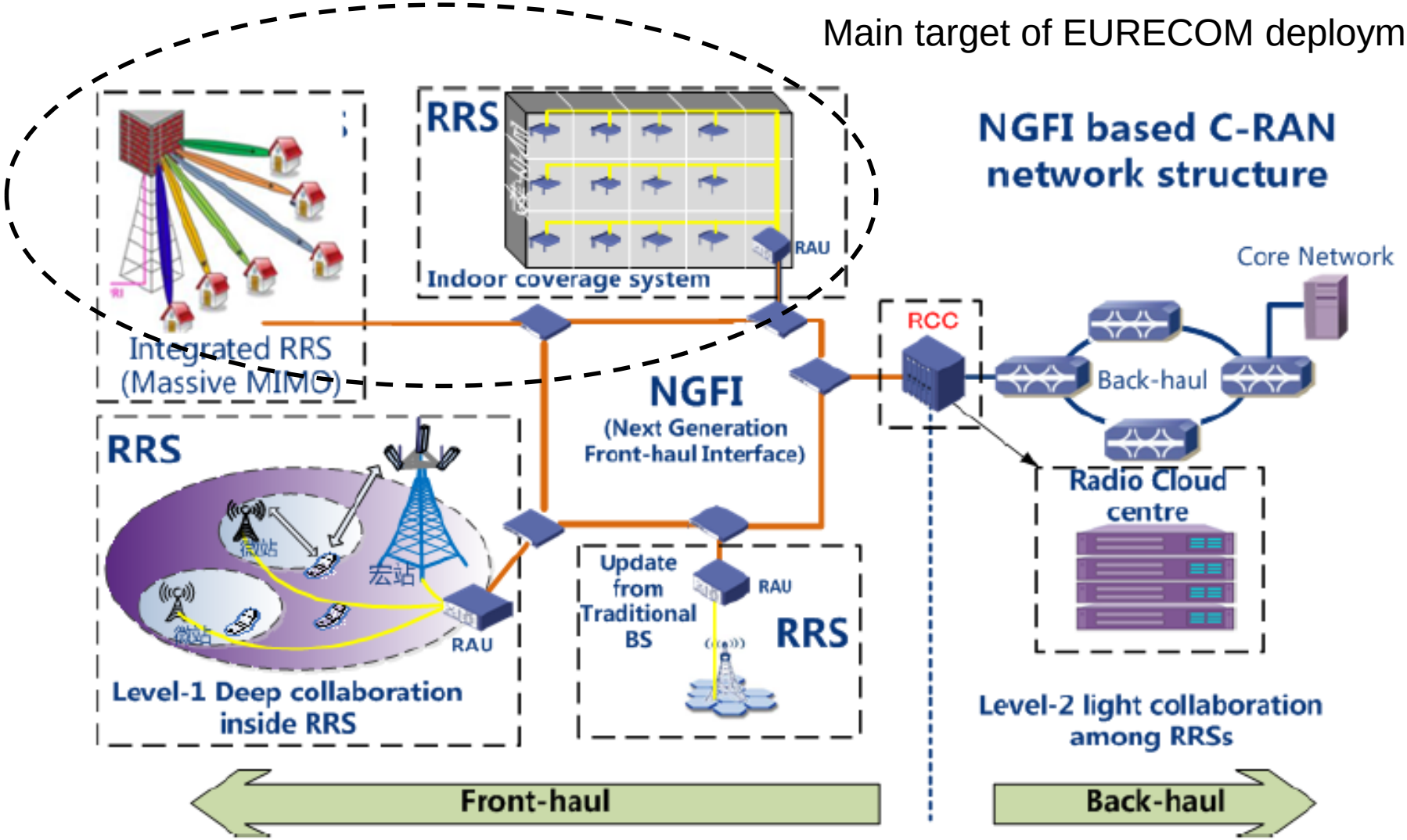

Epiq Sidekiq

- **Based on AD 9361 chipset**
  - 70MHz - 6GHz with up to 50MHz bandwidth per channel
- **SidekiqTM - MiniPCIe**
  - MiniPCIe card form factor (30mm x 51mm x 5mm)
  - 2 independet RF channels (2xRx or Tx+Rx)
  - PCIe Gen1.1 x1 (2.5 Gbps) interface to host + USB 2.0 interface
- **SidekiqTM - M.2**
  - M.2 T3042-D3-B card form factor (30mm x 42mm x 4mm)
  - Up to 2x2 MIMO
  - PCIe Gen2 x1 (5 Gbps) interface to host + USB 2.0 interface
- **Under beta-testing**

Remote Radio Unit

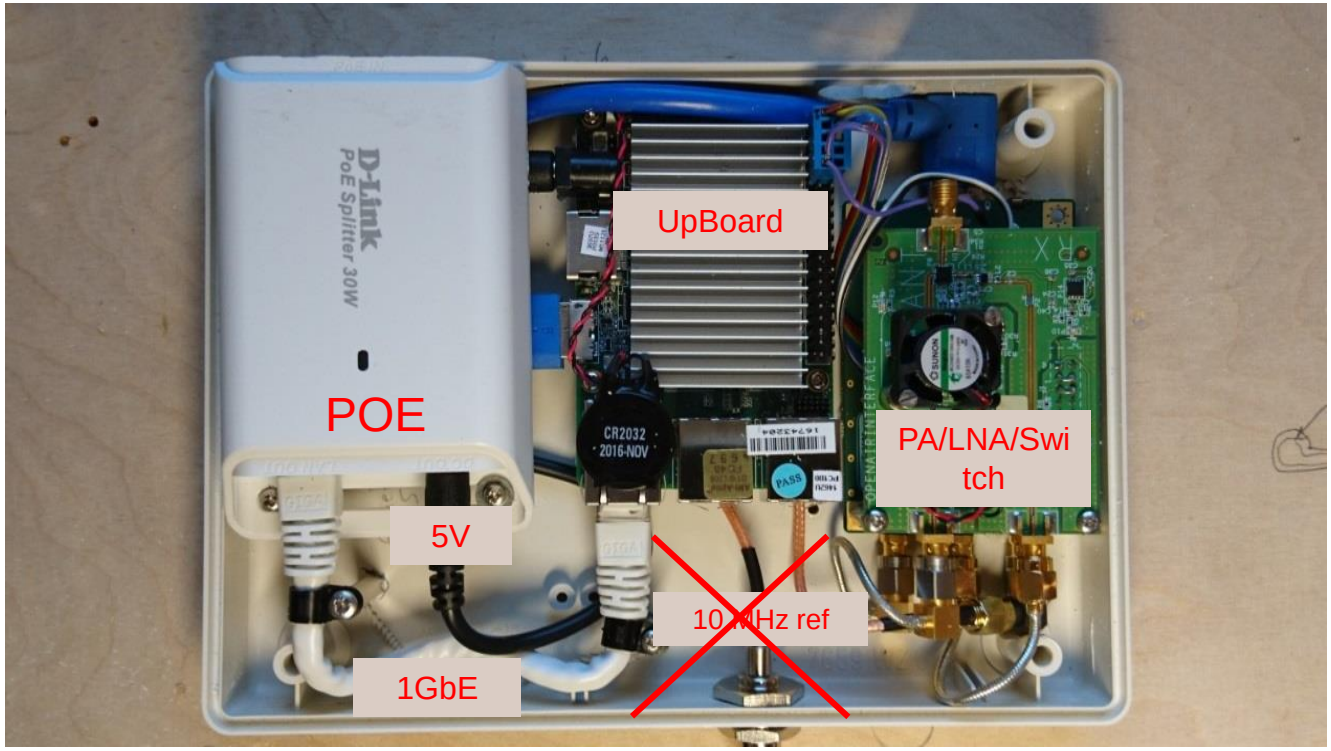

- **Supports SISO 20 MHz**
- **Total cost: ~750$**
  - UPBoard (100$)
  - USRPB200-mini (500$ in quantities)
  - PA/LNA/Switch (100$)
  - PoE+ module (50$)

40MHz reference driving LO of AD9364 RFIC transceiver

Eurecom C-RAN Deployment

Band 38 (TDD, 2.6 GHz)

20Gb optical Ethernet
1Gbit Ethernet
10MHz clock reference

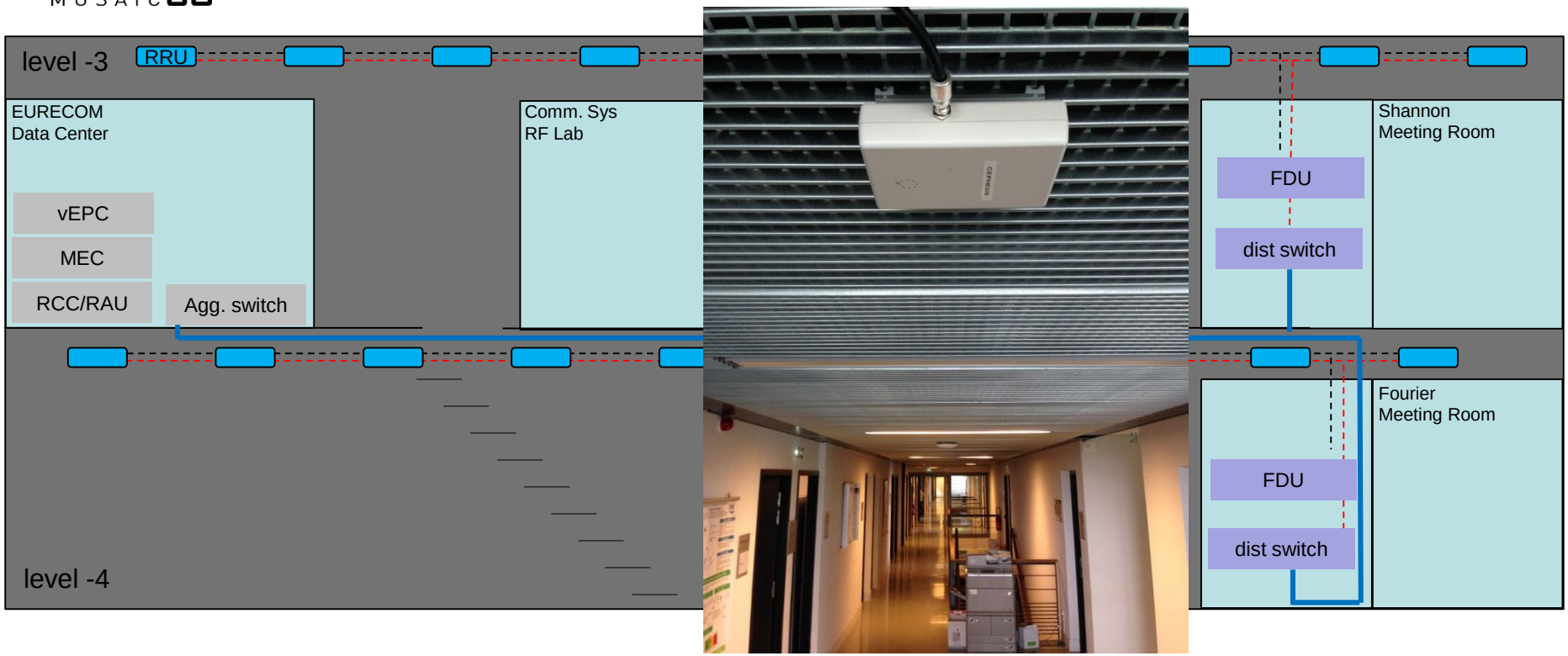

LTE D2D application scope and regulations

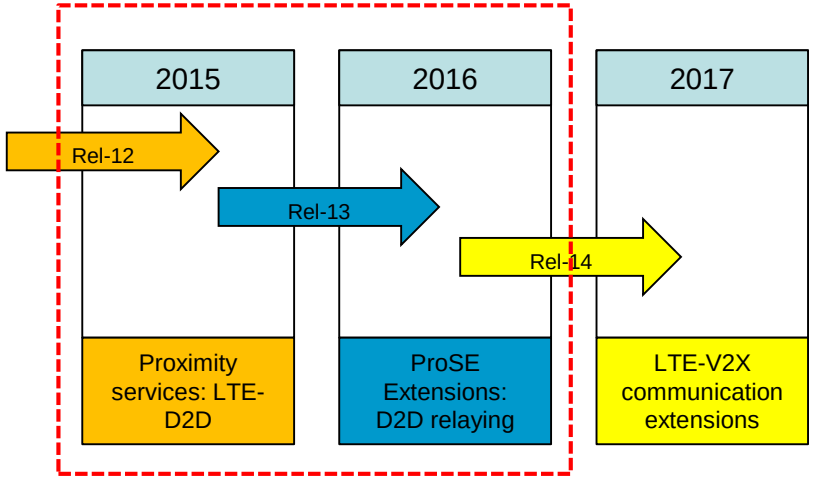

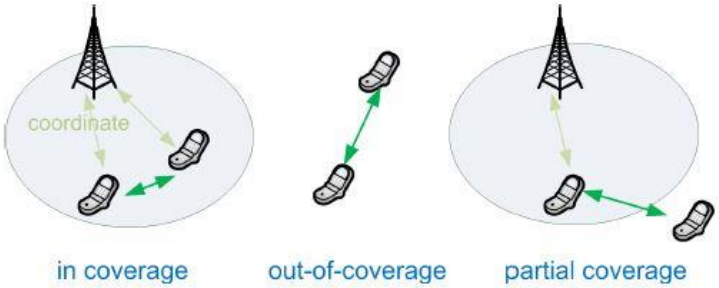

Mode 1: Resource allocation from the eNB

Mode 2: autonomous resource allocation (preconf. resource pools)

Mode 1 (On-net UE) **+ Mode 2** (off-net UE)

Public safety: Group Communication + proximity services

- Replacing old technologies (e.g. TETRA) for public safety authorities
- Direct communication (multicast/unicast)
- Direct discovery supporting unicast
- **Objective**: Availability when cellular networks are not available or fail (e.g., disaster after earthquake)

Proximity commercial applications

- Finding friends nearby, local-advertising, e-health etc.)
- Direct communication + Discovery

Allocated spectrum for ProSe:
694 – 894 MHz
varying per country

LTE V2X application scope and regulations

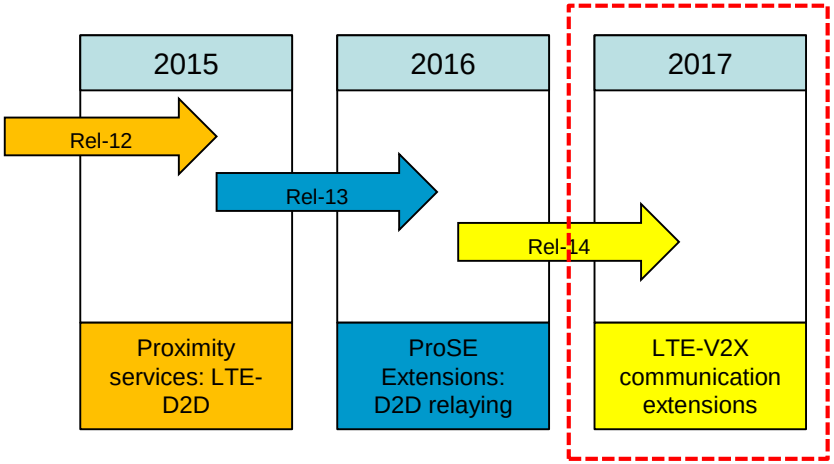

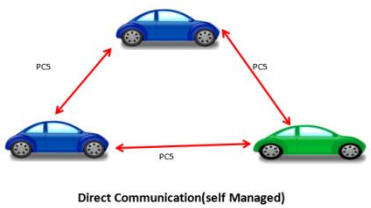

Mode 4: autonomous resource allocation (preconf. resource pools)

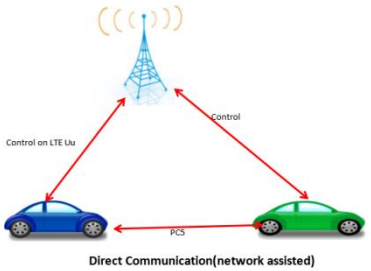

Mode 3: Resource allocation from the eNB

Allocated spectrum for V2X:
5.85 – 5.925 GHz (ITS band)

Roadmap master branch

- **Difference of master (tag 1.1.1) and develop**
  - Rfsimulator
  - Network controlled HO (flexran)
  - X2 HO TDD
  - LTE-M repetitions
  - Bugfixes
    - Power control
    - Nfapi
    - CDRX improvements
- **→ not too many new features, but I would recommend to make this tag 1.2 before next significant merge**

Roadmap develop branch

Feature	Status	Priority
feMBMS	MR ongoing, tests not ok	
New RLC	MR ongoing, tests poor	
5G NR	Regressions tests almost ok	
D2D	Branch finished, MR to be created and tested	
NB-IoT	Not yet fully functional	